ECP28 VL4 C

TWO BEARING MOMENTS OF INERTIA

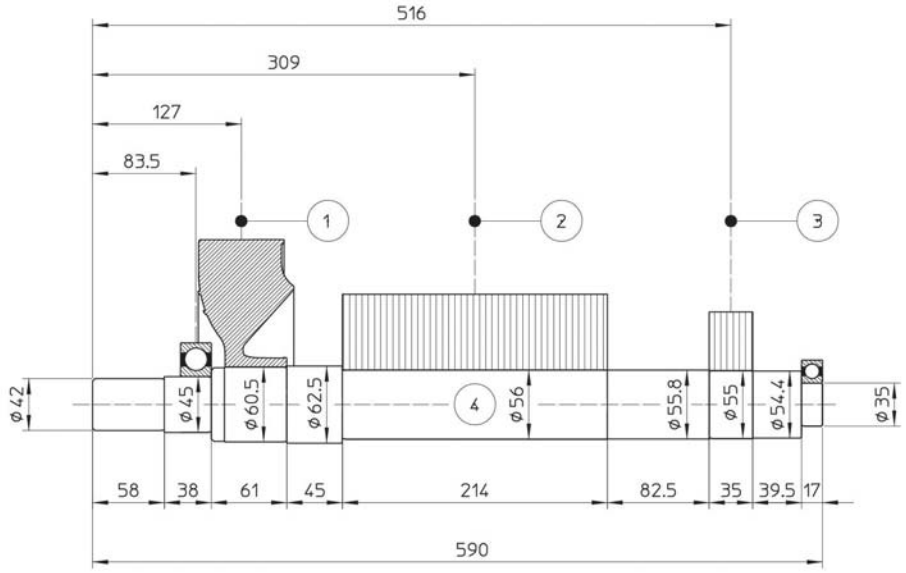

POS.	COMPONENT	WEIGHT (kg)	J (kgm^2)
1	FAN	0.7	0.0046
2	MAIN ROTOR	30.5	0.1214
3	EX. ROTOR	4.4	0.0138
4	SHAFT	10.6	0.0042
TOTAL		46.2	0.1440

TWO BEARING DIMENSIONS

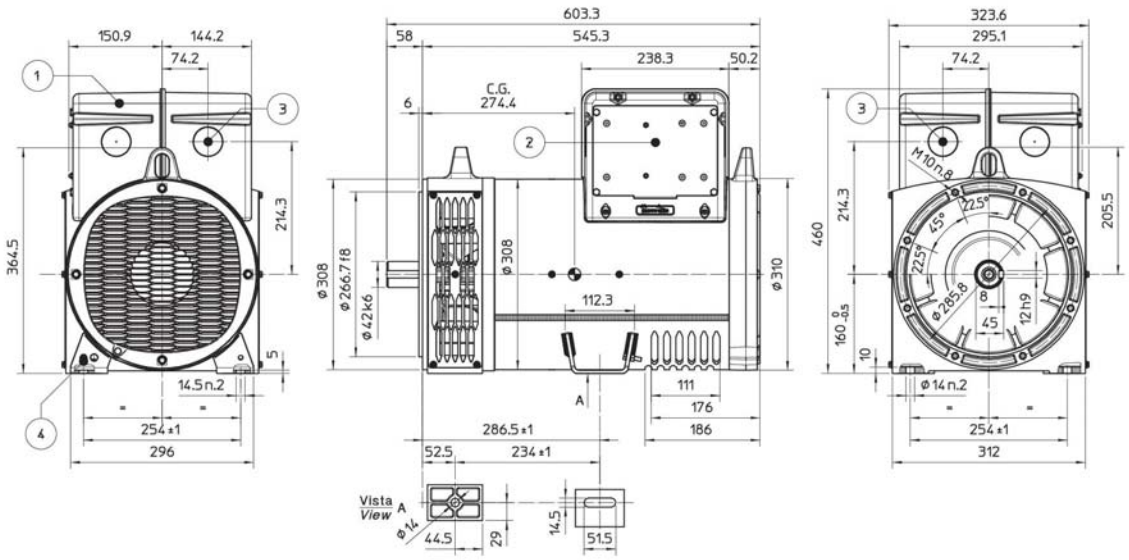

1)	COPERCHIO REMOVIBILE PER ACCESSO AI TERMINALI PRINCIPALI *REMOVABLE COVER FOR ACCESS TO MAIN TERMINALS*
2)	PANNELLO REMOVIBILE PER ACCESSO AL REGOLATORE *REMOVABLE PANEL FOR ACCESS TO AVR*
3)	PRE-TAGLIO PER INGRESSO CAVI ø48mm *PRE-CUT FOR CABLE ENTRY ø48mm*
4)	VITE M6 PER MESSA A TERRA *SCREW M6 FOR GROUNDING*

C.G.= GRAVITY CENTER

ECP28 VL4 C

SINGLE BEARING MOMENTS OF INERTIA

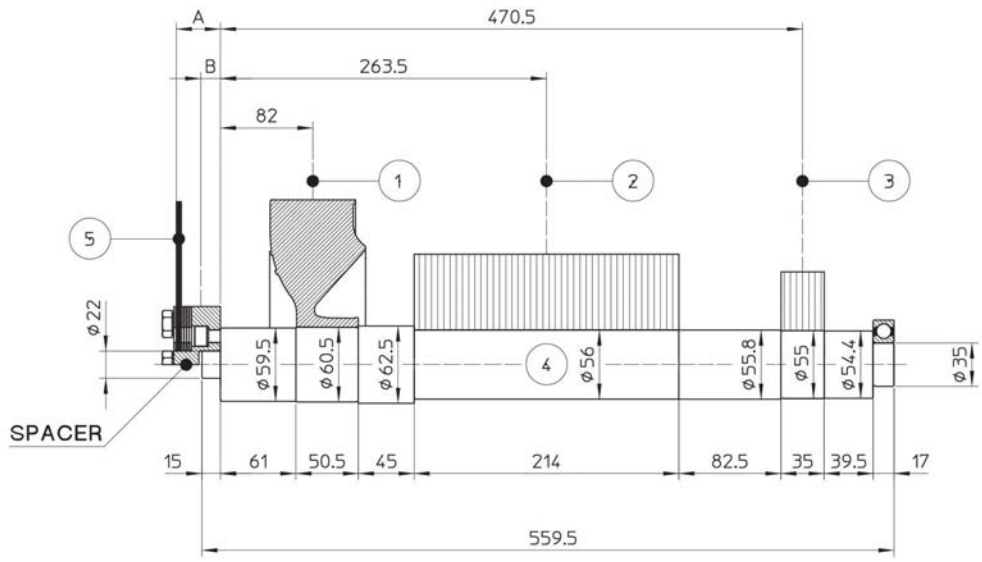

POS.	COMPONENT	WEIGHT (kg)	J (kgm^2)
1	FAN	0.7	0.0046
2	MAIN ROTOR	30.5	0.1214
3	EX. ROTOR	4.4	0.0138
4	SHAFT	10.6	0.0043
TOTAL		46.2	0.1441

SAE N°	5 SHAFTS COUPLING FLEX PLATE			
	A	B	WEIGHT kg	J kgm^2
6 1/2	4	2	1.4	0.0068
7 1/2	4	2	1.7	0.0104
8	35.6	28.3	2.8	0.0158
10	27.6	22.9	3.3	0.0303
11 1/2	14	11.2	3.6	0.0471

SINGLE BEARING DIMENSIONS

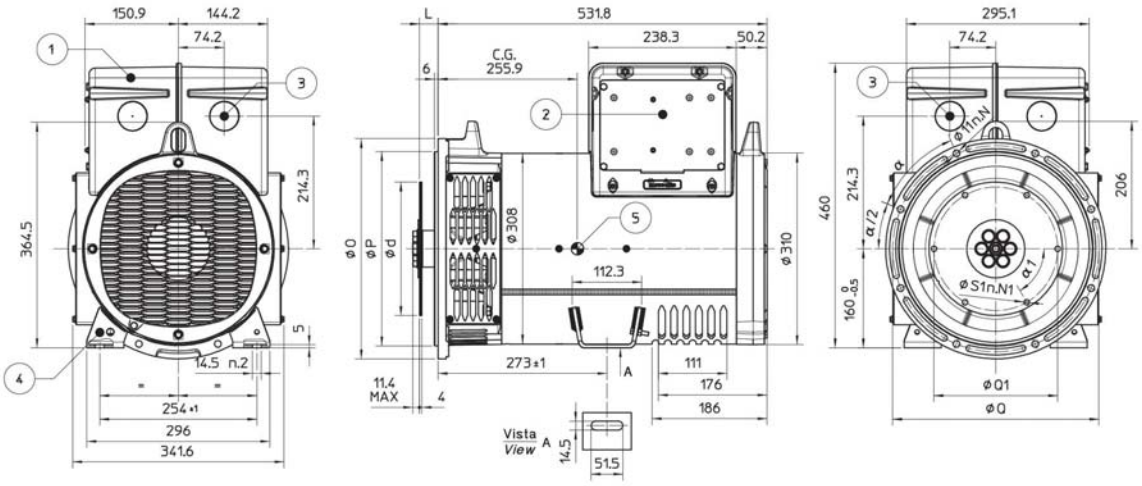

SAE N.	FLANGIA/FLANGE BRIDE/FLANSCH				
	O	P	Q	α	N
5	356	314.3	333.4	45°	8
4	403	362.0	381.0	30°	12
3	451	409.6	428.6	30°	12
2	490	447.7	466.7	30°	12

SAE N.	GIUNTI A DISCHI / DISC COUPLING DISQUE DE MONOPALIER / SCHEIBENKUPPLUNG					
	d	L	Q1	S1	α1	N1
6 1/2	215.90	30.2	200.00	9	60°	6
7 1/2	241.30	30.2	222.25	9	45°	8
8	263.52	62.0	244.47	11	60°	6
10	314.32	53.8	295.27	11	45°	8
11 1/2	352.42	39.6	333.37	11	45°	8

1) COPERCHIO REMOVIBILE PER ACCESSO AI TERMINALI PRINCIPALI
REMOVABLE COVER FOR ACCESS TO MAIN TERMINALS

2) PANNELLO REMOVIBILE PER ACCESSO AL REGOLATORE
REMOVABLE PANEL FOR ACCESS TO AVR

3) PRE-TAGLIO PER INGRESSO CAVI ø48mm
PRE-CUT FOR CABLE ENTRY ø48mm

4) VITE M6 PER MESSA A TERRA
SCREW M6 FOR GROUNDING

5) CENTRO DI GRAVITA' IN CONFIGURAZIONE SAE 3 VOLANO 11.5
GRAVITY CENTER IN CONFIGURATION SAE 3 FLYWHEEL 11.5

C.G.= GRAVITY CENTER